Wind hybridisation | Concept single-line diagram

Package 75ee23b273e66350 | Group 1/2 | common bus repeated on each sheet

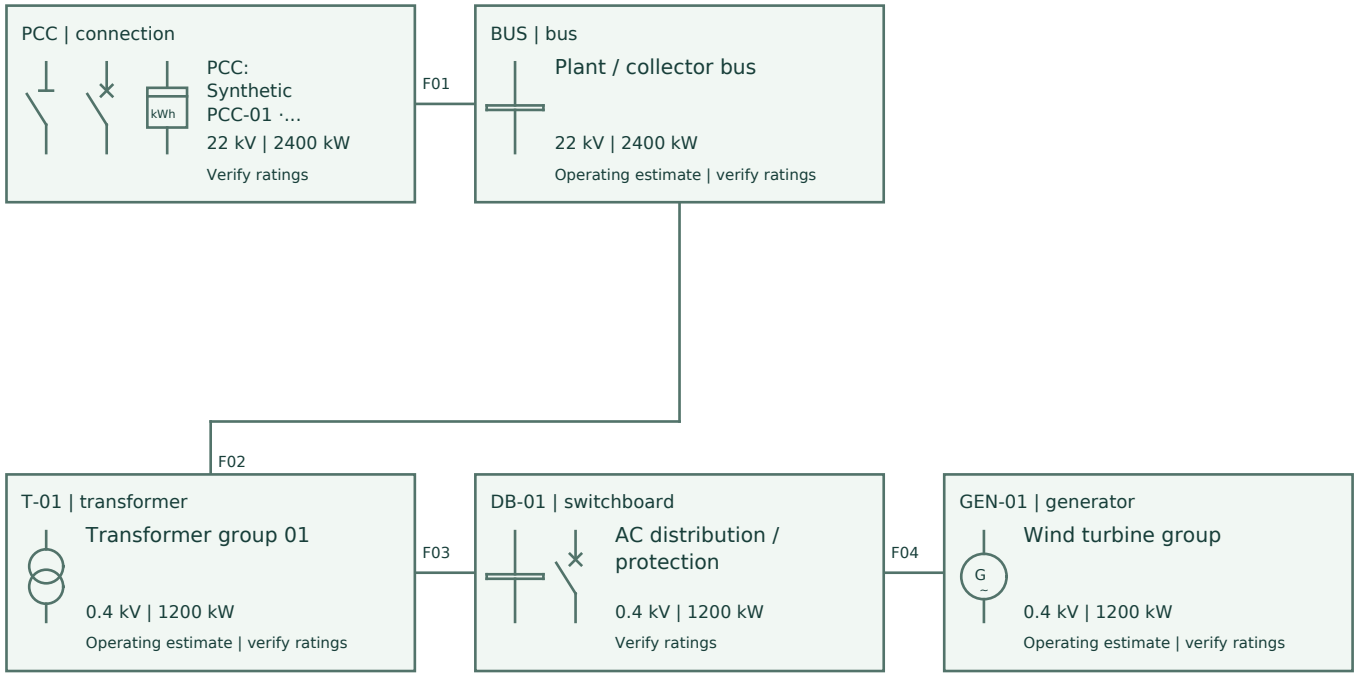

Flows: generation toward PCC; loads away from PCC; BESS bidirectional. Fxx IDs refer to the feeder schedule.

Symbols after IEC 60617 (legend sheet). Crossings are not junctions. Transformer primary = incoming feeder voltage.

CONCEPT ONLY | Equipment ratings, protection, earthing and cables require engineer verification.

Wind hybridisation | Concept single-line diagram

Package 75ee23b273e66350 | Group 2/2 | common bus repeated on each sheet

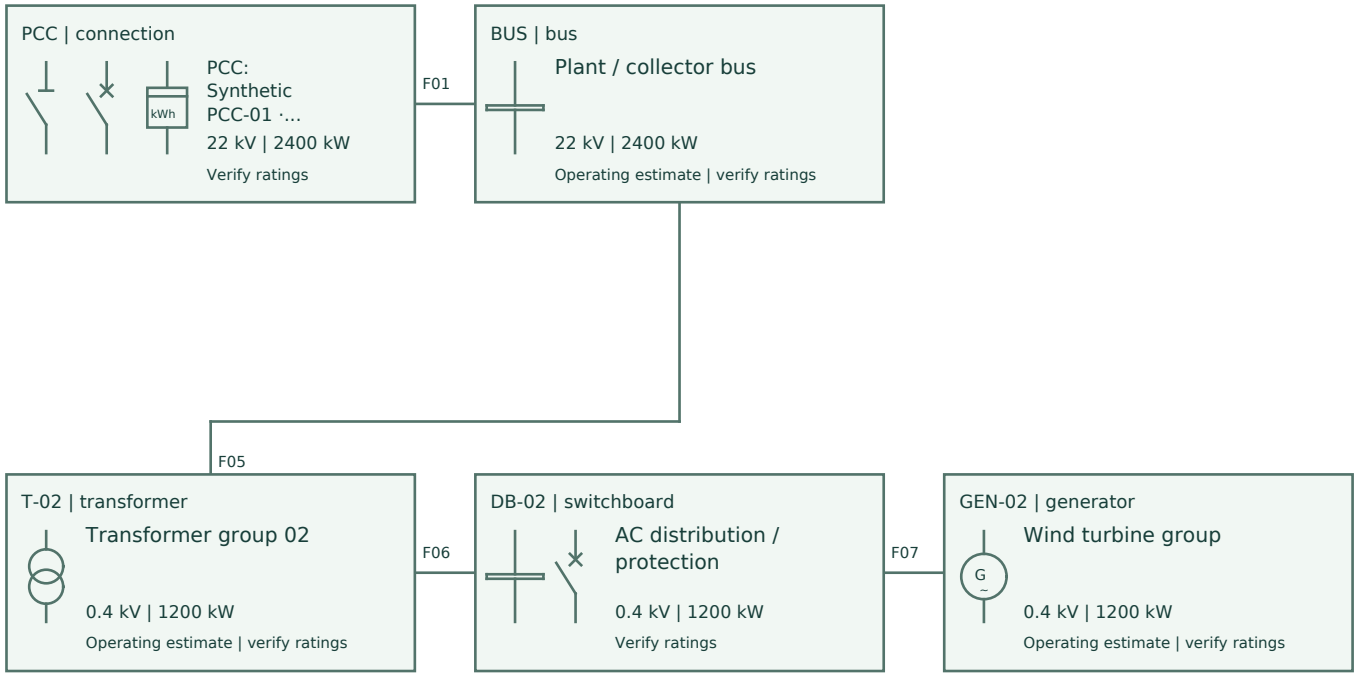

Flows: generation toward PCC; loads away from PCC; BESS bidirectional. Fxx IDs refer to the feeder schedule.

Symbols after IEC 60617 (legend sheet). Crossings are not junctions. Transformer primary = incoming feeder voltage.

CONCEPT ONLY | Equipment ratings, protection, earthing and cables require engineer verification.

Wind hybridisation | Concept single-line diagram

Package 75ee23b273e66350 | symbol legend



PV array / DC field

photovoltaic generator (after IEC 60617)



Inverter (DC/AC)

converter, DC to AC (after IEC 60617)



Bidirectional PCS

converter, DC/AC bidirectional (after IEC 60617)



Frequency converter (VFD)

converter, AC/AC (after IEC 60617)



Transformer

two-winding transformer (after IEC 60617)



Circuit breaker

circuit breaker (after IEC 60617)



Disconnector

disconnector / isolator (after IEC 60617)

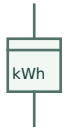

Energy meter

integrating instrument, watt-hour meter (after IEC 60617)



Busbar

busbar (after IEC 60617)



Earthing

earth (after IEC 60617)



Battery

battery of cells (after IEC 60617)



Generator

generator, AC (after IEC 60617)



Motor

motor, AC (after IEC 60617)



Load / consumer

load (general)

Symbols drawn after IEC 60617. This remains a CONCEPT single-line diagram: symbol shapes do not certify the drawing, ratings or protection.

Protection devices shown are functional placeholders; selection, settings and selectivity are engineering scope.